LOLLI II

BAR STOOL - G38BN
COUNTER STOOL - G38CN

Design: Mark Daniel, 2013
Materials: Powder coated steel, 100% polyester upholstery, moulded PU foam with internal steel reinforcement.
Upholstery: Series 3 fabric, Martindale count exceeds 100K
COM Requirement: .84 sq yds
Certifications: Meets or exceeds ANSI/BIFMA X5.1. Meets or exceeds ANSI/BIFMA M7.1 VOC emissions standards for office furniture.
Care & Cleaning: Clean and dust legs with a damp cloth. Gently blot spills on upholstery and clean with a specialty fabric cleaner.
Warranty: 3 years

FINISH OPTIONS:

black PC
pewter gray fabric

white PC
pewter gray fabric

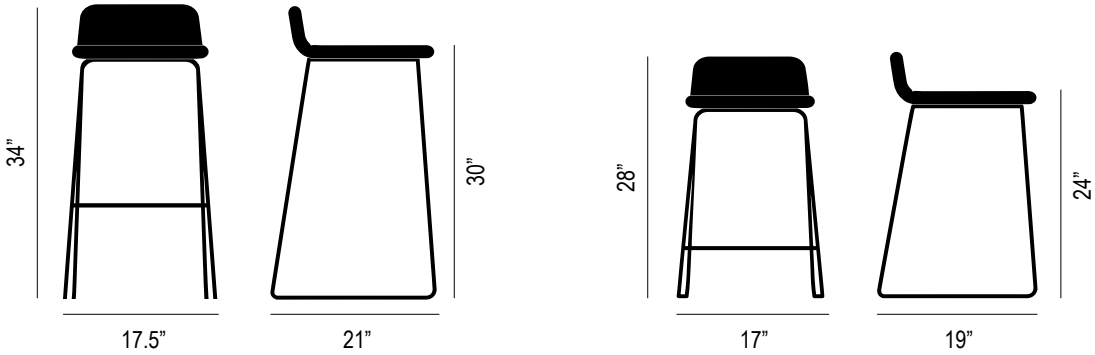

Weight: Bar stool 16 lbs, Counter stool 14.25 lbs
Packaging: Double walled cardboard, internal blocking. Bar stool 22”W x 41.3”H x 19”D, Counter stool 19.7”W x 36.2”H x 18”D
Pieces per box: 2
Assembly: Simple assembly required
Duty Code: 9401.71.00.11
Made in: China
Lead time: 3 - 5 business days (stocked quickship product), backorders & special orders 4 - 6 weeks + transit

© 2020 m.a.d. furniture design North America, LLC | www.madfurnituredesign.com | hello@madfurnituredesign.com